SALES DRAWING SALES DRAWING

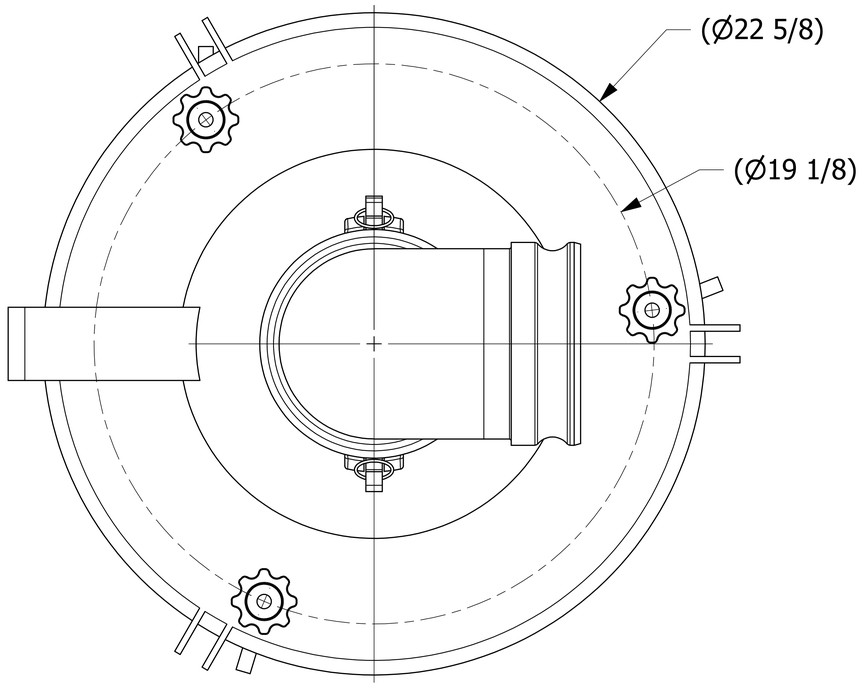

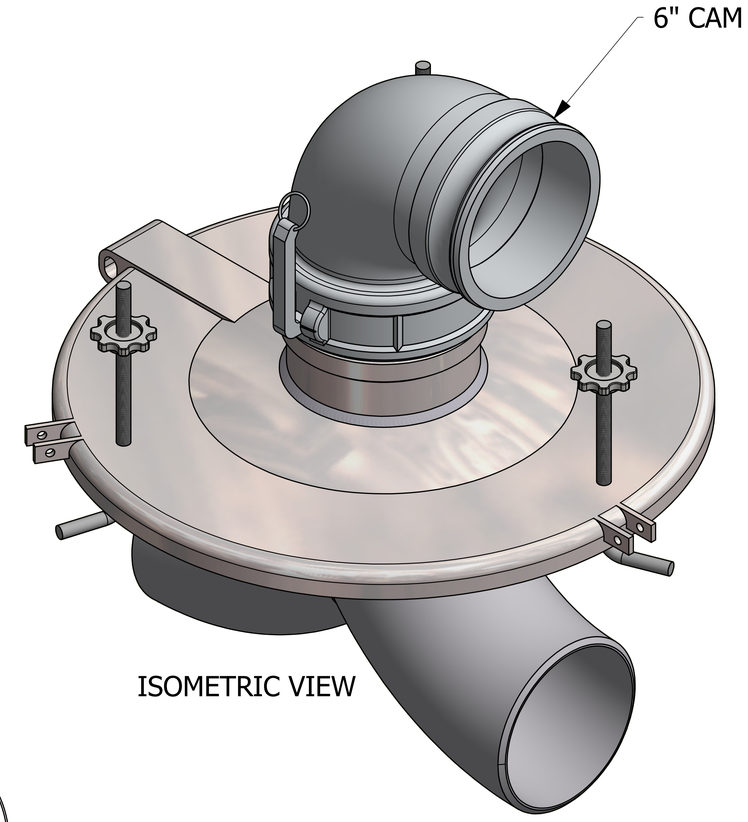

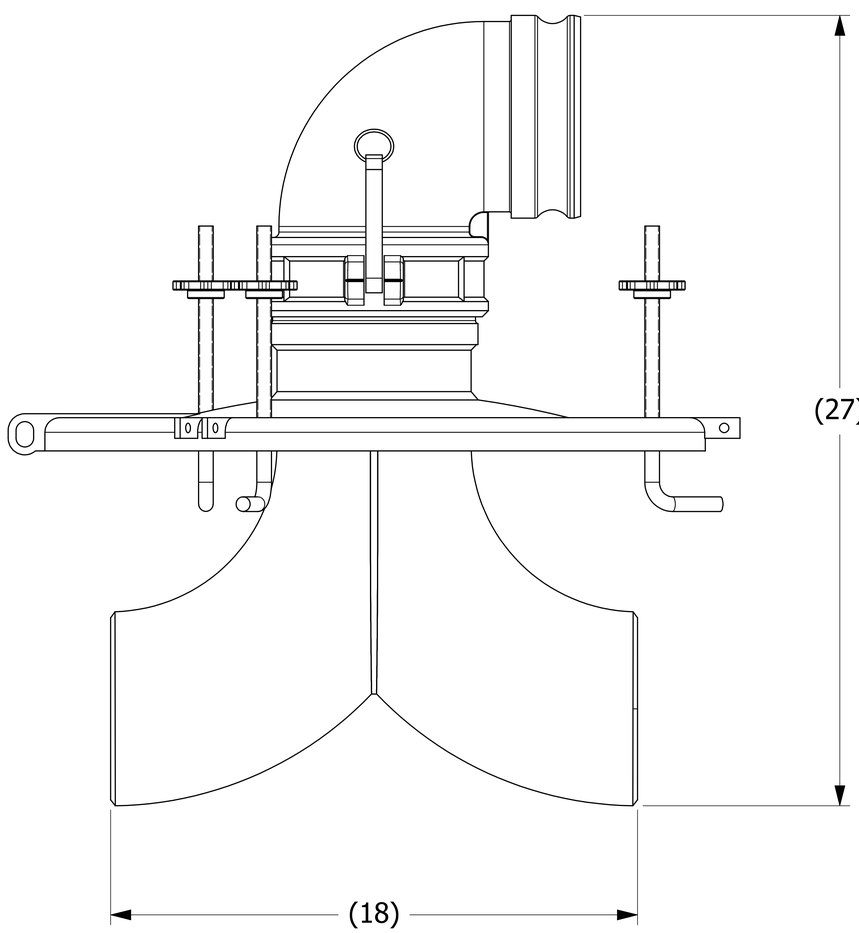

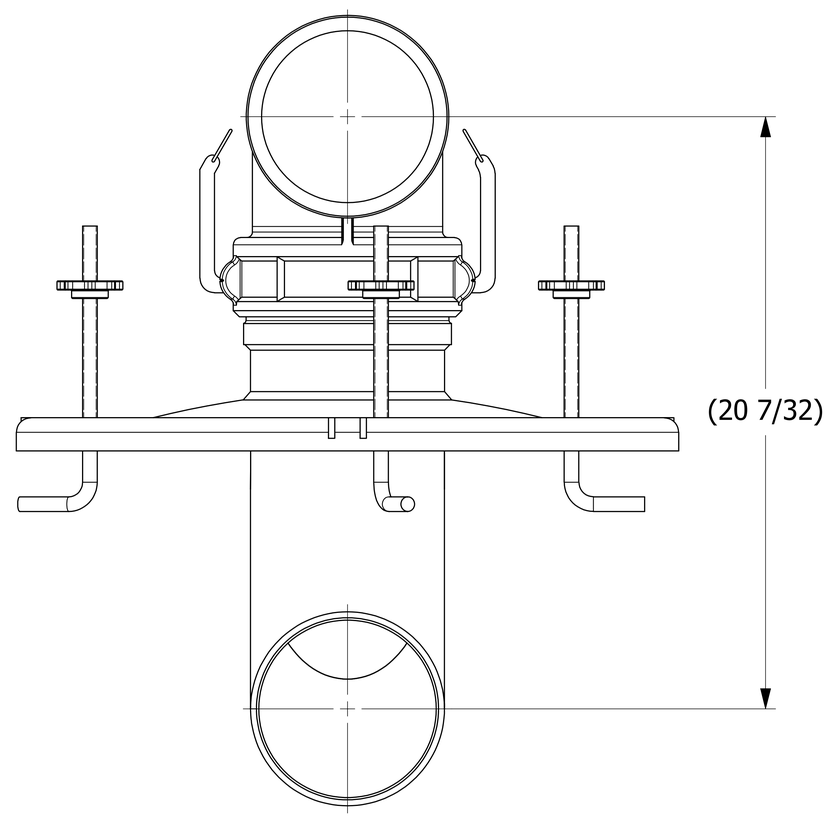

NOTE:
GASKET MATERIAL IS BLACK NITRILE.

REV	BY	DATE	DESCRIPTION
B	WEB	8-23-17	OVERALL HEIGHT (27) WAS (32 7/16), UPDATED VIEWS
A	JJK	2-20-14	RELEASED FOR PRODUCTION

UNLESS OTHERWISE SPECIFIED DIMENSIONAL TOLERANCES
FRACTIONAL: ±1/16
X.XX: ±.03
X.XXX: ±.015
ANGULAR: ±1°
DEBURR ALL SHARP EDGES. ALL MACHINED SURFACES TO HAVE A 125 RMS FINISH UNLESS NOTED OTHERWISE.
THIRD ANGLE PROJECTION

DRAWN BY:	JJK
CHECKED BY:	JRO
PROTOTYPE BY:	JJK
PROTOTYPE DATE:	11/26/2013
APPROVED FOR PRODUCTION BY:	CHL
PRODUCTION DATE:	2/21/2014

SALCO PRODUCTS, INC.

PART NAME: LOADING COVER ASSEMBLY 20"

MATERIAL: ALUMINUM

PROJECT #: 131119 | SHEET #: 1 OF 1 | SCALE: 1:2

DRAWING #: E37813 | PART #: LC20A4A1

THIS PRINT, PROPERTY OF SALCO PRODUCTS INC, CONTAINS PROPRIETARY INFORMATION AND MUST NOT BE COPIED, REPRODUCED, OR USED DETRIMENTALLY TO OUR INTEREST.

SALES DRAWING SALES DRAWING